BYG140 KONSTRUKSJONSMEKANIKK 1
Assignment (6)
(MoM Ch 1: Stress, Ch 2: Strain & Ch 3: Mechanical Properties of Material)

Question 1

Rods AB and BC each have a diameter of 5 mm. If the load of $P = 2$ kN is applied to the ring, determine the average normal stress in each rod if $\theta = 60°$.

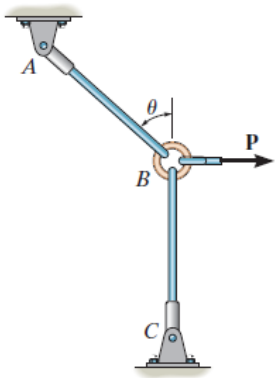

Figure Q1

Question 2

Determine the average normal stress at section a–a and the average shear stress at section b–b in member AB. The cross section is square, 12 mm on each side.

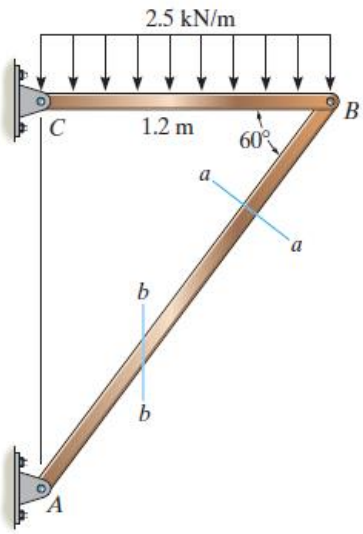

Figure Q2

Question 3

The joint is fastened together using two bolts. Determine the required diameter of the bolts if the failure shear stress for the bolts is $\tau_{fail} = 350$ MPa. Use a factor of safety for shear of F.S. = 2.5.

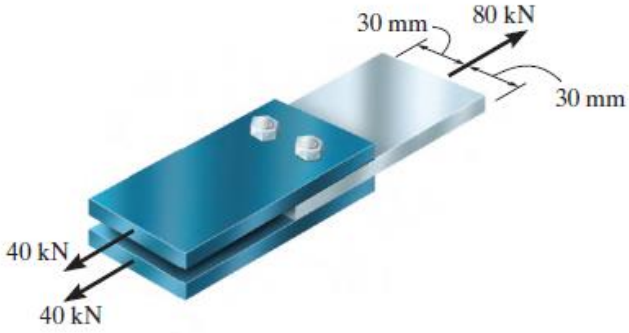

Figure Q3

Question 4

The wood specimen is subjected to the pull of 10 kN in a tension testing machine. If the allowable normal stress for the wood is $(\sigma_t)_{allow} = 12$ MPa and the allowable shear stress is $\tau_{allow} = 1.2$ MPa, determine the required dimensions b and t so that the specimen reaches these stresses simultaneously. The specimen has a width of 25 mm.

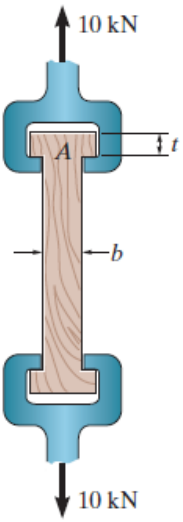

Figure Q4

Question 5

The rigid beam is supported by a pin at A and wires BD and CE. If the load **P** on the beam causes the end C to be displaced 10 mm downward, determine the normal strain developed in wires CE and BD.

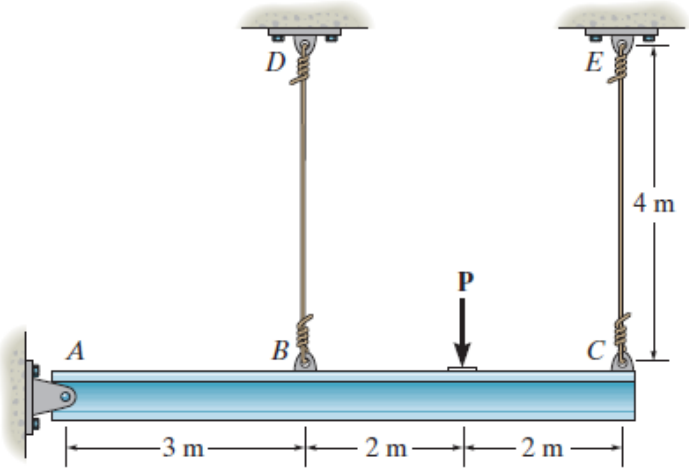

Figure Q5

Question 6

The piece of plastic is originally rectangular. Determine the shear strain γ_{xy} at corners D and C if the plastic distorts as shown by the dashed lines.

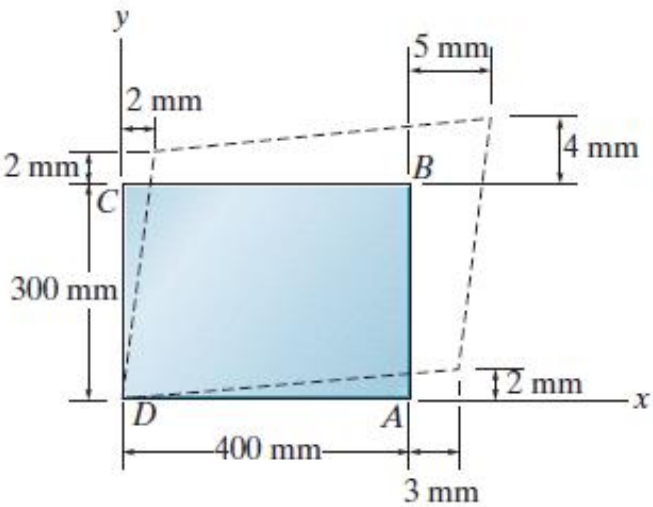

Figure Q6

Question 7

The stress-strain diagram for a polyester resin is given in the figure. If the rigid beam is supported by a strut *AB* and post *CD* made from this material, determine the largest load *P* that can be applied to the beam before it ruptures. The diameter of the strut is 12 mm and the diameter of the post is 40 mm.

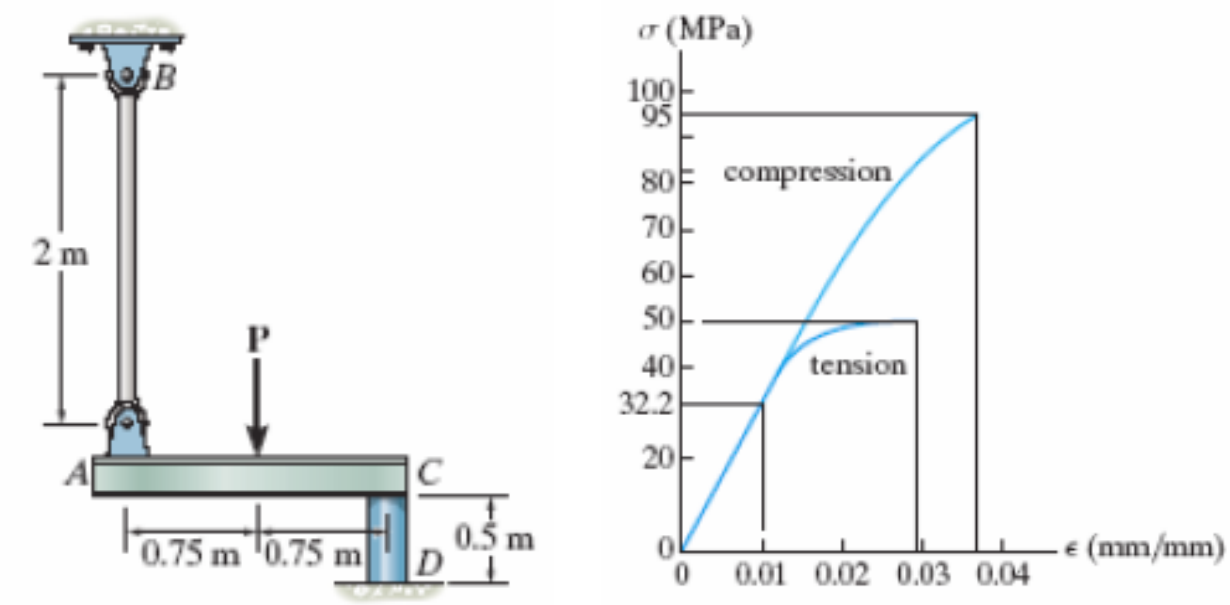

Figure Q7