EXAM PART B – PLUG & ABANDONMEMT

1. When downhole activities or production from a well is discontinued, the well status needs to be distinguished. List the three different well statuses and explain them in your own words. (**5p**)

2. List 5 main challenges associated with the plug and abandonment of wells. (**5p**)

3. In the context of permanent P&A, three different well barrier envelopes are distinguished; primary barrier, secondary barrier and environmental barrier. Explain the environmental barrier and its two main objectives. (**5p**)

4. There are different techniques of plug placement. Two main techniques are balanced plug method and two-plug method. Explain them and list the main advantage of the two-plug method. (**5p**)

5. An operator decided to permanently P&A a reservoir in a field. A strong aquifer supports the reservoir. The reservoir pore pressure gradient is 0.563 psi/ft at 12795 ft TVD. Consider a worst-case scenario of the well filled entirely with gas. Assume a gas gradient equal to 0.1 psi/ft. The minimum horizontal stress is 94% of the fracturing stress. The reservoir formation strength data is given in Table 1. Calculate the minimum setting depth of the secondary plug by plotting and the implementation of pressure gradient curve method. (**20p**)

Table 1 – Fracture gradient versus depth.

Fracture gradient (psi/ft)	Depth (ft TVD)
0.78806	7545
0.79672	8595
0.81404	8891
0.76641	8923
0.7794	11122
0.8227	11154
0.82703	12139
0.85734	12762
0.87899	12795

6. A platform well (Figure 1) has been drilled and completed with the vertical tree in 1985. The top of cement (TOC) in the B-annulus is below the permanent packer and the well suffers from sustained casing pressure in the A- and B-annulus. Caliper log shows big holes along the production tubing (shown with triangle on the well schematic). Operator decided to permanently plug and abandon the well. Through the operation, BOP has been necessitated to control the well pressure. Create a decision making flowchart for permanent P&A of reservoir zone only. Include the contingency plans. (**15p**)

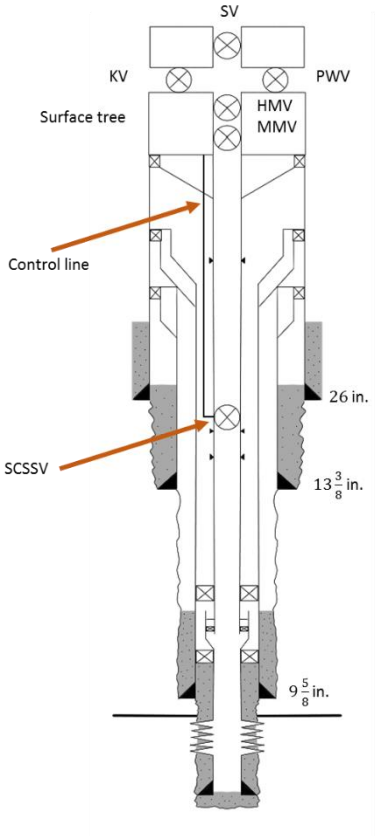

Figure 1 – A platform well completed with the vertical tree.

7. Traditional methods of creating an annulus barrier in uncemented casing require section milling. List 4 challenges that section milling creates during a P&A operation. (**5p**)

8. You have been asked to design a balanced cement plug for an openhole with a size of 8½ in. with a plug length of 800 ft. Assume that 10 bbl of spacer is pumped ahead of cement plug. (**15p**)

   Additional information:

   Hole capacity: 0.3941 ft^3/ft

   Drillpipe: 4-in, 14.0 lbm/ft, Grade X-95

   Wall thickness of the drillpipe: 0.330 in.

   ID of the drillpipe: 3.340 in.

Based on the given information calculate the followings:

   a. Calculate the required volume of cement slurry.

   b. Length of balanced plug with drillpipe in.

   c. Volume of spacer behind the cement.

9. Certain formations are known to move as a result of stress differences. These formations are able to isolate an annulus space where cement is missing. List 2 of the qualification requirements of a formation seal based on the guidelines for qualification of materials for the suspension and abandonment of wells, Oil & Gas UK, Issue 1. (**5p**)

10. Appendix A shows SBT (Segmented Bond Log) of a 10 ¾ in. cemented casing. The interval 2525 – 2544 m is carbonate formation with low source of gamma ray. However, the interval 2550-2575 m is a shale formation with high source of gamma ray. Write your reflection on the cement quality in the interval of 2550 – 2575 m. Support your reflections with reasons and write them. Additional information: ATMN: Minimum Attenuation; ATMX: Maximum Attenuation; ATAV: Average Attenuation; CCL: Casing Collar Locator. (**10p**)

11. Which option is correct regarding Young's modulus? (**1p**)

    a. Materials with lower Young's moduli are more susceptible to failure when exposed to the common mechanical stresses

    b. It describes tensile elasticity or the tendency of a material to deform along ab axis when opposing forces are applied along that axis

    c. Young's modulus does not characterize the flexibility of a material

    d. None of the above mentioned options are correct

12. Figure 2 shows the axial Stress-Strain curve for a material. Select the correct option. (**1p**)

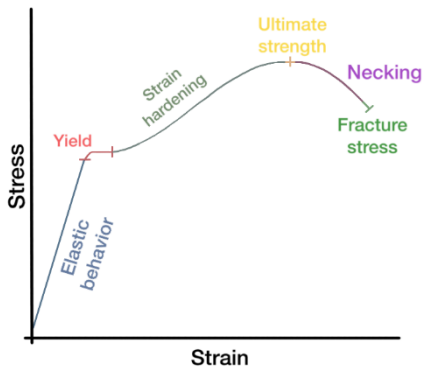

Figure 2 – Axial stress-Strain curve for a material.

    a. The material is brittle

    b. The material is ductile

    c. The material has no tendency to creep

    d. All the options are correct

13. Regarding creep, all the followings are correct EXCEPT: (**1p**)

    a. It is a time-dependent deformation

    b. Material creeps to reduce high shear stresses

    c. Formation creep can lead to collapse of casing

    d. Instantaneous linear deformation under constant load

14. All the following options are correct EXCEPT: (**1p**)

    a. Poisson's ratio is defined as lateral strain to axial strain in a material loaded uniaxially in the axial direction

    b. Poisson's ratio is a unitless parameter

    c. Poisson's ratio allows calculation of shear failure

    d. Poisson's ratio allows calculation of lateral deformation of barrier under a given pressure and under temperature change

15. In well cementing logging, the elapsed time between the transmitter firing and the arrival of the first part of the wave exceeding a preset amplitude threshold, is called: (**1p**)

    a. Travel time

    b. Transit time

    c. Amplitude

    d. Attenuation

16. In well cementing logging, regarding the transit time, all the following answers are correct EXCEPT: (**1p**)

    a. Shorter transit time is an indication of either poor sonde centralization or a fast formation

    b. Slightly longer transit time is generally an indication of a good bond and should correspond to reasonably low amplitudes

    c. If no transit-time curve is present on the log, no quality control of the logs is possible, and the evaluation will be very limited

    d. Slightly longer transit time is generally an indication of a good bond and should correspond to reasonably high amplitudes

17. Traditional methods of creating an annulus barrier in uncemented casing require section milling. Perforate, wash and Cementing (PWC) has been suggested and utilized as an alternative method to section milling. According to the given preview, select the correct answer. (**1p**)
    a. Currently, there is no method to verify the quality of the cement placed behind the casing by PWC technique
    b. The PWC annulus cleanout and cementing method is not highly dependent on compatibility between all fluids circulated into and out of the annular space
    c. The top perforations are larger to facilitate easier initiation of washing behind the casing without creating pressures exceed the adjacent formation fracture gradient
    d. PWC is not capable to establish a mechanical foundation for the cement plug inside the casing

18. According to NORSOK D-010, Rev. 4, all the following options are correct EXCEPT: (**1p**)
    a. The overburden formation including shallow sources of inflow shall be assessed with regards to abandonment requirements.
    b. Multiple reservoir zones/perforations located within the same pressure regime can be regarded as one reservoir.
    c. Control lines and cables shall not form a part of the permanent barriers.
    d. Requirement for isolation of formations, fluids and pressures for temporary and permanent abandonment are not the same.

19. Absence of SCP (Sustained Casing Pressure) during the life cycle of the well indicates that … (**1p**)
    a. Poor sealing capability of the casing cement.
    b. Milling operations is necessary.
    c. Running leak off test is necessary.
    d. Good sealing capability of the casing cement.

20. Based on the NORSODK D-010, Rev. 4, “the application of technical, operational and organizational solutions to reduce the risk of uncontrolled release of formation fluids throughout the entire life cycle of the well” is called… (**1p**)
    a. Temporary abandonment
    b. Leak testing
    c. Permanent well barrier
    d. Well integrity

Appendix A

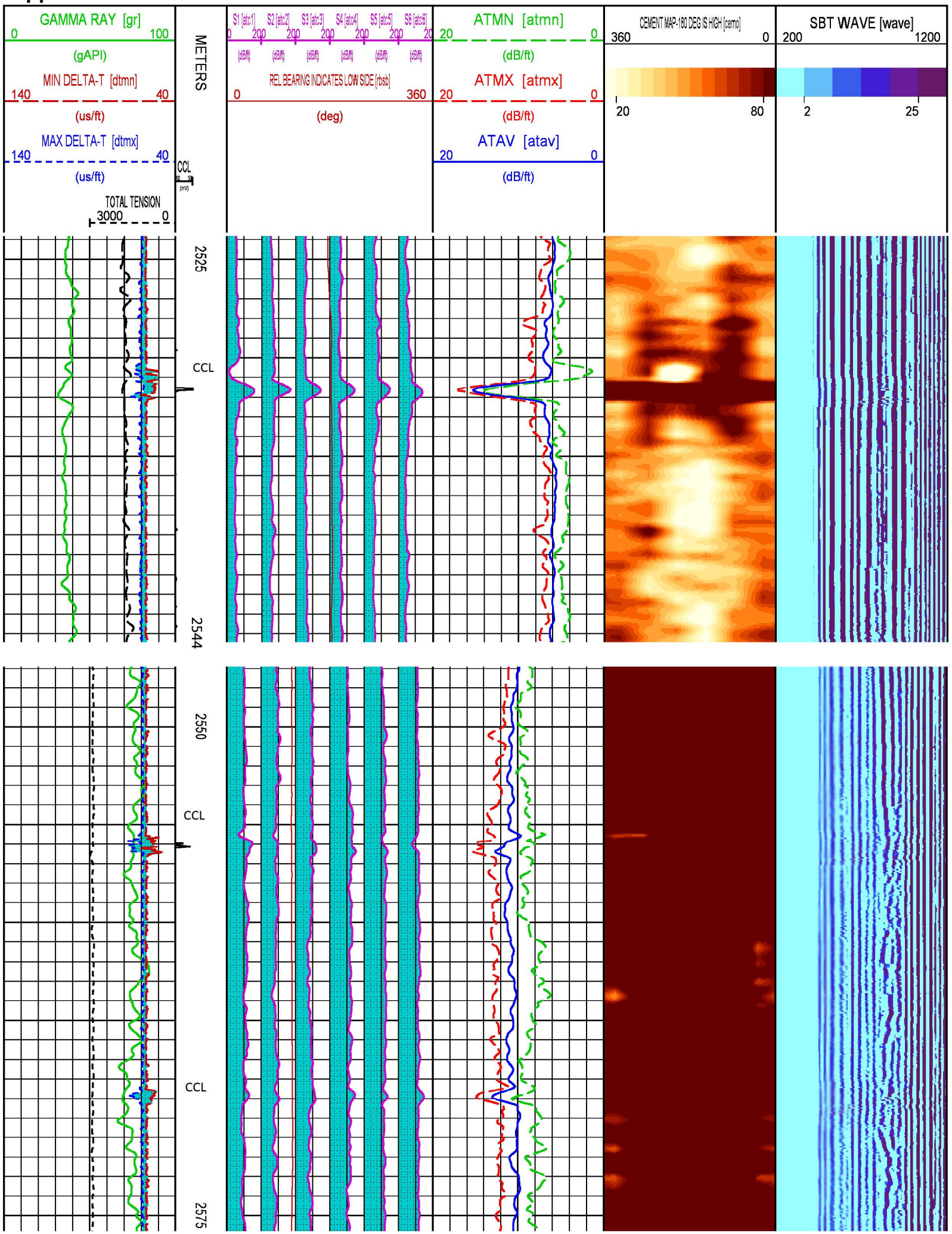
GAMMA RAY [gr]
0
100
(gAPI)
MIN DELTA-T [dtmn]
140
40
(us/ft)
MAX DELTA-T [dtmx]
140
40
(us/ft)
TOTAL TENSION
3000
0
METERS
CCL
(mV)
S1 [atc1]
S2 [atc2]
S3 [atc3]
S4 [atc4]
S5 [atc5]
S6 [atc6]
0
200
(dB/ft)
REL BEARING INDICATES LOW SIDE [rbsb]
0
360
(deg)
ATMN [atmn]
20
0
(dB/ft)
ATMX [atmx]
20
0
(dB/ft)
ATAV [atav]
20
0
(dB/ft)
CEMENT MAP-180 DEG IS HIGH [cemq]
360
0
20
80
SBT WAVE [wave]
200
1200
2
25
2525
CCL
2544
2550
CCL
CCL
2575