BYG140 KONSTRUKSJONSMEKANIKK 1

Assignment (3)

(Statics Ch 7: Internal Foroces , Ch 9: Center of Gravity and Centroid & Ch 10:Moment of Inertia)

Question 1

Determine the internal normal force, shear force and the moment at points *C* and *D*.

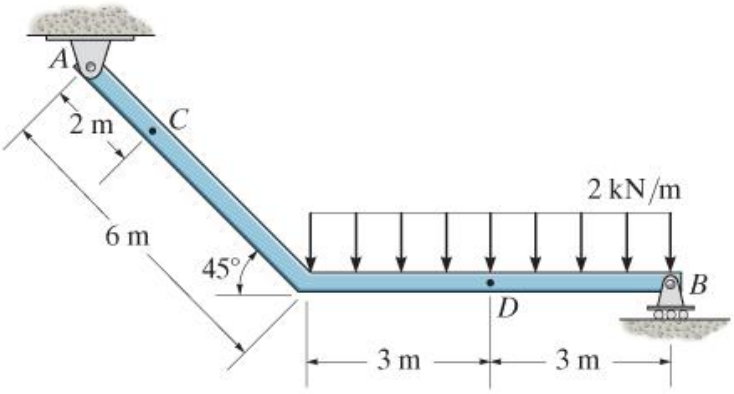

Question 2

Determine the internal normal force, shear force and the moment at points *C* in the simply supported beam.

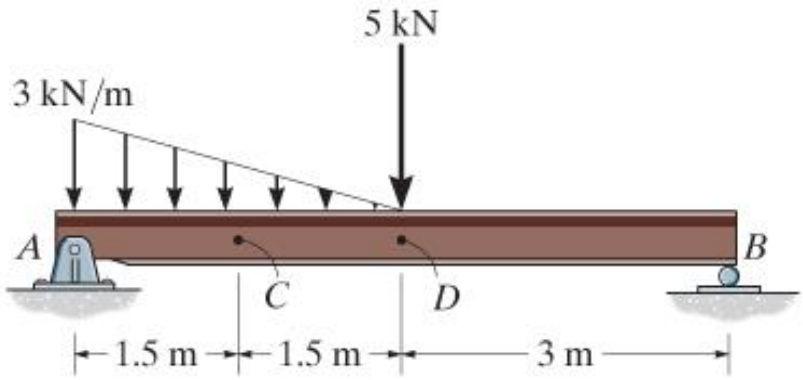

Question 3

Draw the shear and moment diagrams for the beam.

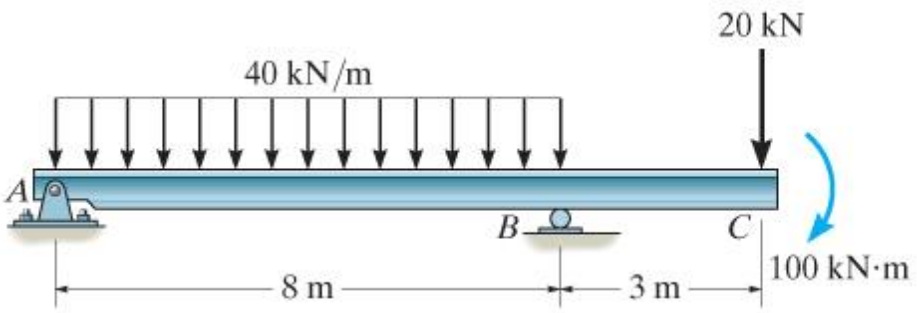

Question 4

Draw the shear and moment diagrams for the beam.

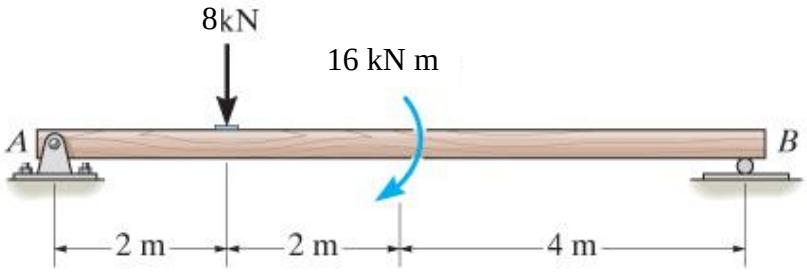

Question 5

Draw the shear and moment diagrams for the compound supported beam

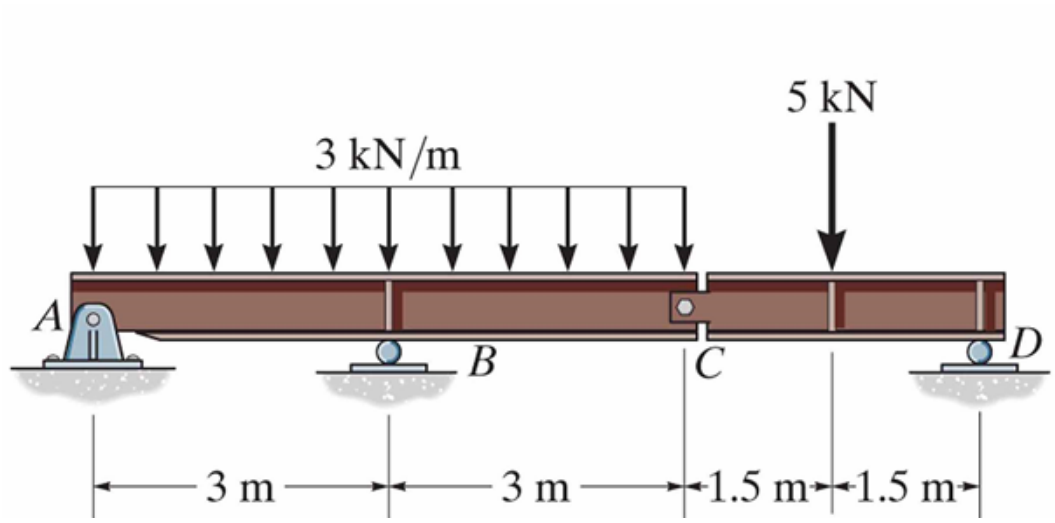

)

Question 6

*9–8. Determine the area and the centroid $(\bar{x}, \bar{y})$ of the area.

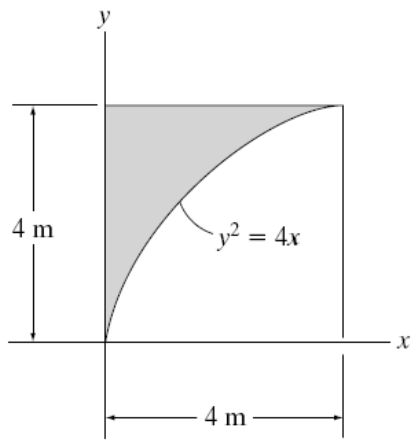

Question 7 (optional)

Determine the location $\bar{y}$ of the centroidal axis $\bar{x}-\bar{x}$ of the beam's cross-sectional area. Neglect the size of the corner welds at A and B for the calculation.

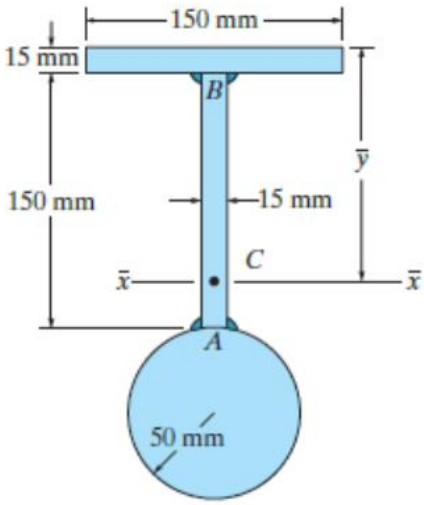

Question 8

The gravity wall is made of concrete. Determine the location $(\bar{x}, \bar{y})$ of the center of mass G for the wall.

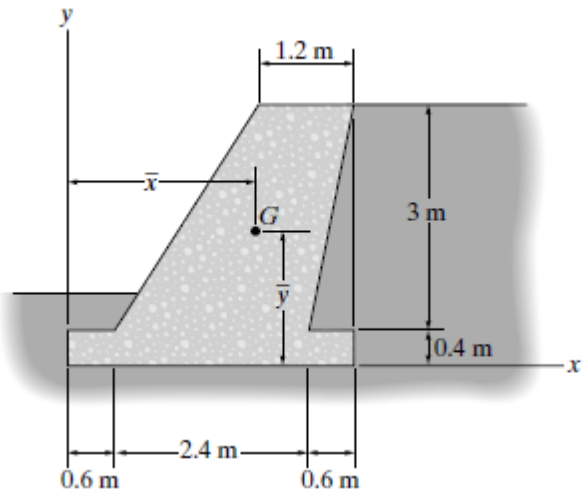

Question 9

Determine the moment of inertia of the area about the x axis.

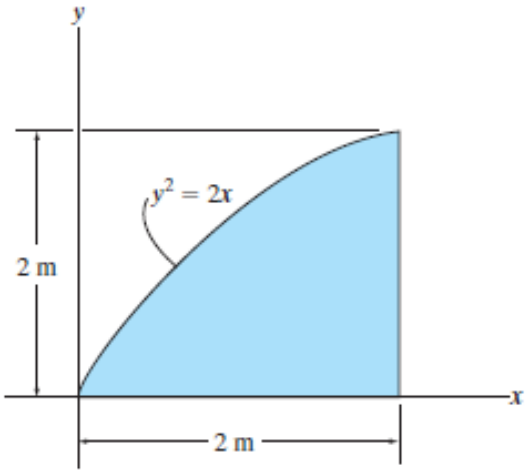

Question 10 (optional)

Determine the moment of inertia of the beam's cross-sectional area about the y axis. (Refer figure in Question 11)

Question 11

Determine $\bar{y}$, which locates the centroidal axis x' for the cross-sectional area of the T-beam, and then find the moment of inertia about the x' axis.

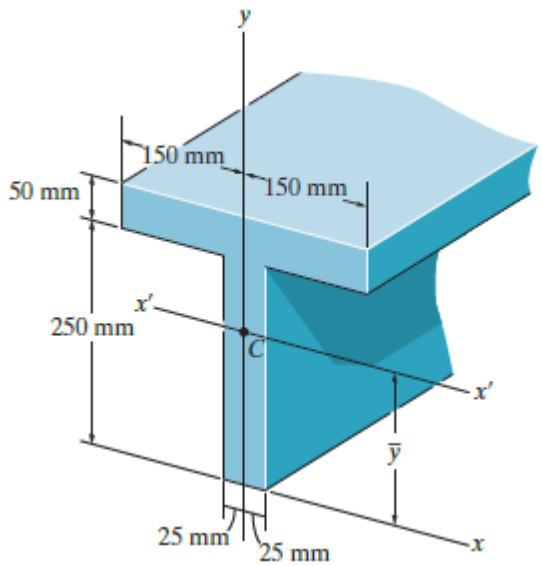

Question 12
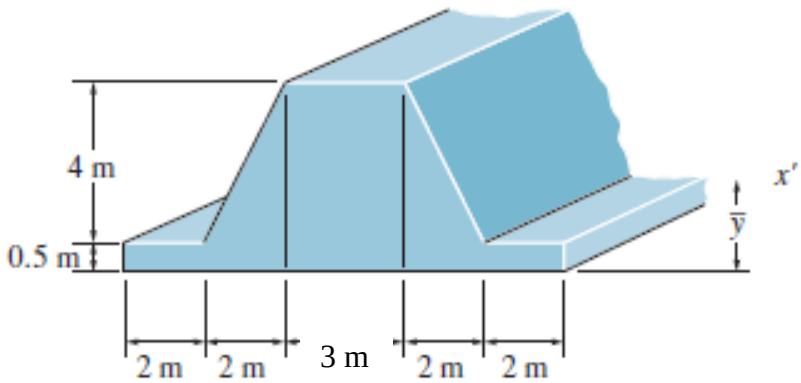
Locate the centroid $\bar{y}$ of the cross section and determine the moment of inertia of the section about the x' axis.